Electrical and Computer Engineering Department
University of Maryland
College Park, MD 20742-3285
Glenn L. Martin Institute of Technology ♦ A. James Clark School of Engineering

Dr. Charles B. Silio, Jr.
Telephone 301-405-3668
Fax 301-314-9281
silio@umd.edu

ENEE 350 Homework Set No. 3
(Due: Class 10, Mon., February 18, 2008)

1. Work the following problems in Chapter 2 of text by A. Tanenbaum:

   a. Problem 2-26.

   b. Problem 2-27.

   c. Problem 2-33.

2. From Chapter 2 and sections 5.5.7, 5.6.4, and 5.6.5 of Chapter 5 of the text by A. Tanenbaum, *Structured Computer Organization,* define what is meant by the following terms:

   a. Interrupt

   b. DMA

   c. Trap

   d. Cycle Stealing

   e. Bus Arbiter

3. Read Sections 3.2, 3.3, and 3.7 in Chapter 3 of text by A. Tanenbaum, *Structured Computer Organization,* Prentice-Hall, 2006, and work the following problems from Chapter 3:

   a. Problem 3-15.

   b. Problem 3-22.

4. A 64-bit static random access memory (RAM) integrated circuit (IC) chip is organized as 16 words with 4 bits per word with internal bi-directional data bus and tri-state data bus connection to the outside world. In addition to address and data lines, it has two control inputs (an enable (EN) input and a read/write (R/W) input); address decoding logic is included on the chip to select one of 16 words, and the function table for the control inputs is shown as follows:

Enable	Read/Write	Operation	Condition of Outputs
0	0	Write	(Data bus used as input)
0	1	Read	Value of selected word
1	X	Inhibit	High Impedance state

   a. Draw a (box) block diagram labelling the data input lines, data output lines, address selection lines, and control inputs for this IC. Note that the enable input (EN) on this chip is also called the "chip select (CS)" input on other similar RAM chips. (The low order bit is A_0 and the high order bit is A_n for the address, etc. for the data lines.)

   b. Show the external connections of eight of these RAM chips that will produce a 64 word by 8 bit RAM. You need not draw all of the wires or label each and every pin so long as your labeling makes clear what is connected to what. Assume a 2 to 4 decoder package is available if appropriate; and if you use it, show it as a box with inputs and outputs clearly labeled and show where its outputs are used as inputs. (There must be no ambiguity among the connections.)

-over-

5. Consider a 8-bit data word with 4 check bits that uses a Hamming single error correcting code for the 12-bit codeword. By adding another parity bit to the coded word, the Hamming code can be used to correct a single error and detect double errors. If we include this additional parity bit, then a previous 12-bit coded word becomes $001110010100P_{13}$, where P_{13} is evaluated from the exclusive-OR of the other 12 bits. This produces the 13-bit word 0011100101001 (even parity). When the 13-bit word is read from memory the check bits are evaluated and so is the parity P over the entire 13 bits. If $P = 0$, the parity is correct (even parity), but if $P = 1$, then the parity over the 13 bits is incorrect (odd parity). Letting $S = s_3s_2s_1s_0$ be the binary representation of the syndrome resulting from evaluation of the Hamming single error correcting parity check equations, then the following four cases can occur:

   If $S = 0$ and $P = 0$: No error occurred.

   If $S \neq 0$ and $P = 1$: A single error occurred, which can be corrected.

   If $S \neq 0$ and $P = 0$: A double error occurred, which is detected but cannot be corrected.

   If $S = 0$ and $P = 1$: An error occurred in the P_{13} bit.

   Note that this scheme cannot detect more than two errors.

   a. It is necessary to formulate the Hamming code for four data bits, d_3, d_5, d_6, d_7, together with three parity bits p_1, p_2, and p_4.
      (1) Assign the parity bits and show the resulting 7-bit composite codeword for the data word 0010.
      (2) Evaluate three parity check equations for the syndrome $s_2s_1s_0$ assuming no error has occurred.
      (3) Assume and error in bit d_5 occurred during a write into memory. Show how the error in the bit is detected and corrected.
      (4) Add parity bit P_8 to include a double-error detection capability in the code. Assume that errors occurred in bits p_2 and d_5. Show how the double error is detected.
   b. Given the 8-bit data word 01011011, generate the 13-bit codeword for the Hamming code that corrects single errors and detects double errors.
   c. Given the 11-bit data word 11001001010, generate the 16-bit codeword for the Hamming code that corrects single errors and detects double errors.
   d. How many parity check bits must be included with the data word to achieve single error correction and double error detection when the data word contains:
      (1) 16 bits;
      (2) 32 bits;
      (3) 48 bits;
      (4) 64 bits;

6. A 12-bit Hamming-code word containing 8 bits of data and 4 parity bits is read from memory. What was the original 8-bit data word that was written into memory if the 12-bit word read out is as follows:

   (a) 000011101010

   (b) 101110000110

   (c) 101111110100

7. Design a synchronous binary counter using three JK master-slave flipflops (having active high direct clear inputs) whose combinational circuit outputs (T1, T2, T3, and T4) produce a repeating sequence of four nonoverlapping clock pulses. (Hint: Use a modulo-8 binary counter each of whose outputs (T1, T2, T3, and T4) takes the value 1 for exactly one odd numbered state and takes the value 0 otherwise. Also note that the direct clear inputs on the flip-flops can be driven by a power-on reset circuit to clear all three flip-flops and initialize them to the zero state before starting the repeating count sequence by driving their clock inputs with a synchronizing clock oscillator signal.)

8. Redesign the 1-bit ALU in Figure 1 below so that the functions performed, as specified by the 2-bit control inputs F_1F_0 are those shown in the folowing table:

F_1 F_0	ALU output
0 0	A+B addition
0 1	A.and.B logical AND
1 0	A straight-through
1 1	$\overline{A}$ logical complement

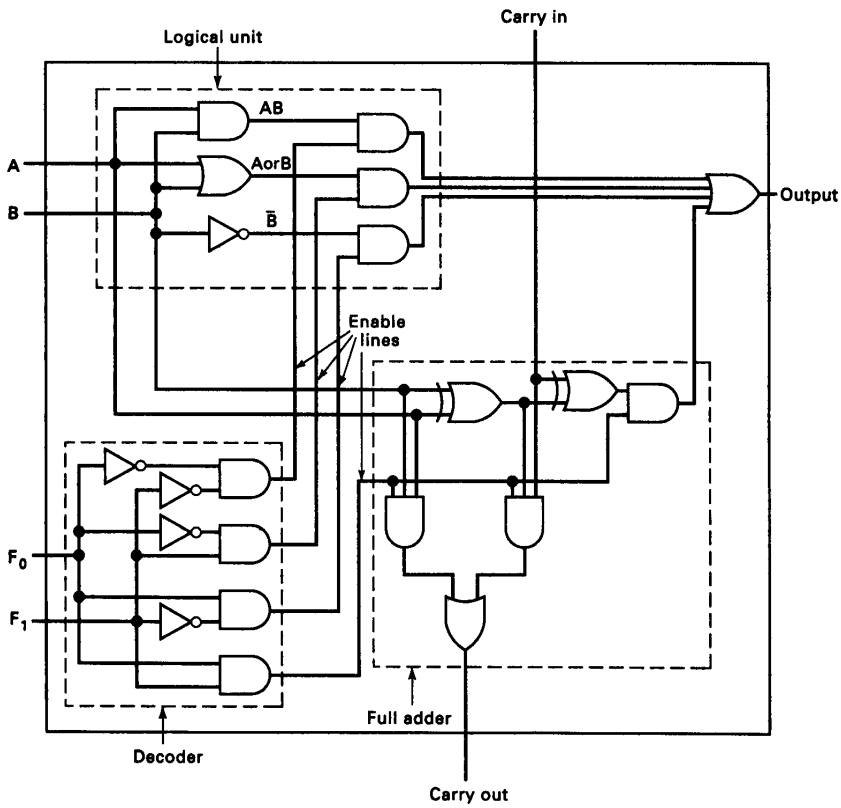

Figure 1: 1-bit ALU

9. Redesign the combinational shift circuit in textbook Fig. 3-16, p. 154, to provide the following functionality with two shift control bits H_1H_0 replacing the single control line C so that

H_1 H_0	ALU output
0 0	No Shift (i.e. straight-through)
0 1	Logical right shift by 1 bit
1 0	Logical left shift by 1 bit
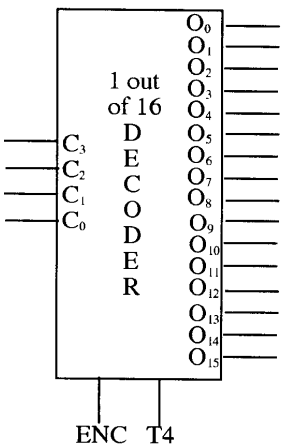
10. Design a 1 out of 16 decoder circuit with additional inputs ENC and T4 (from problem 7) that decodes the four bit number $C_3C_2C_1C_0$ and produces an output pulse coincident with T4 when the enable input ENC = 1; the outputs remain all zeros if ENC = 0.